CHAPTER 4

Digital Transmission

A computer network is designed to send information from one point to another. This information needs to be converted to either a digital signal or an analog signal for transmission. In this chapter, we discuss the first choice, conversion to digital signals; in Chapter 5, we discuss the second choice, conversion to analog signals.

We discussed the advantages and disadvantages of digital transmission over analog transmission in Chapter 3. In this chapter, we show the schemes and techniques that we use to transmit data digitally. First, we discuss **digital-to-digital conversion** techniques, methods which convert digital data to digital signals. Second, we discuss **analog-to-digital conversion** techniques, methods which change an analog signal to a digital signal. Finally, we discuss **transmission modes.** We have divided this chapter into three sections:

- The first section discusses digital-to-digital conversion. Line coding is used to convert digital data to a digital signal. Several common schemes are discussed. The section also describes block coding, which is used to create redundancy in the digital data before they are encoded as a digital signal. Redundancy is used as an inherent error detecting tool. The last topic in this section discusses scrambling, a technique used for digital-to-digital conversion in long-distance transmission.
- The second section discusses analog-to-digital conversion. Pulse code modulation is described as the main method used to sample an analog signal. Delta modulation is used to improve the efficiency of the pulse code modulation.
- The third section discusses transmission modes. When we want to transmit data digitally, we need to think about parallel or serial transmission. In parallel transmission, we send multiple bits at a time; in serial transmission, we send one bit at a time.

4.1 DIGITAL-TO-DIGITAL CONVERSION

In Chapter 3, we discussed data and signals. We said that data can be either digital or analog. We also said that signals that represent data can also be digital or analog. In this section, we see how we can represent digital data by using digital signals. The conversion involves three techniques: line coding, block coding, and scrambling. Line coding is always needed; block coding and scrambling may or may not be needed.

4.1.1 Line Coding

Line coding is the process of converting digital data to digital signals. We assume that data, in the form of text, numbers, graphical images, audio, or video, are stored in computer memory as sequences of bits (see Chapter 1). Line coding converts a sequence of bits to a digital signal. At the sender, digital data are encoded into a digital signal; at the receiver, the digital data are recreated by decoding the digital signal. Figure 4.1 shows the process.

Figure 4.1 *Line coding and decoding*

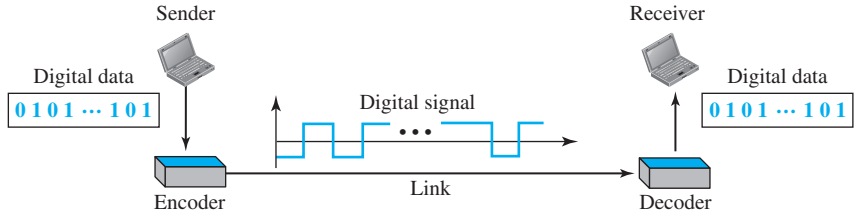

Characteristics

Before discussing different line coding schemes, we address their common characteristics.

Signal Element Versus Data Element

Let us distinguish between a **data element** and a **signal element.** In data communications, our goal is to send data elements. A data element is the smallest entity that can represent a piece of information: this is the bit. In digital data communications, a signal element carries data elements. A signal element is the shortest unit (timewise) of a digital signal. In other words, data elements are what we need to send; signal elements are what we can send. Data elements are being carried; signal elements are the carriers.

We define a ratio r which is the number of data elements carried by each signal element. Figure 4.2 shows several situations with different values of r.

In part a of the figure, one data element is carried by one signal element ($r = 1$). In part b of the figure, we need two signal elements (two transitions) to carry each data element ($r = \frac{1}{2}$). We will see later that the extra signal element is needed to guarantee synchronization. In part c of the figure, a signal element carries two data elements ($r = 2$).

Figure 4.2 *Signal element versus data element*

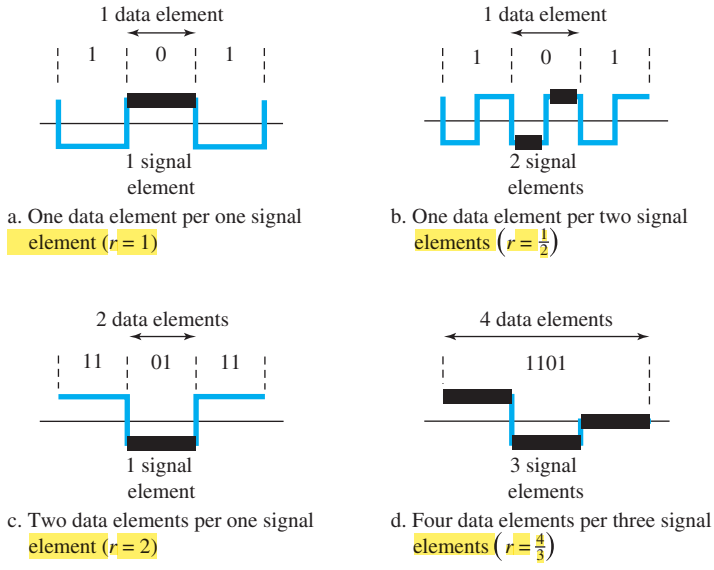

Finally, in part d, a group of 4 bits is being carried by a group of three signal elements ($r = 4/3$). For every line coding scheme we discuss, we will give the value of r.

An analogy may help here. Suppose each data element is a person who needs to be carried from one place to another. We can think of a signal element as a vehicle that can carry people. When $r = 1$, it means each person is driving a vehicle. When $r > 1$, it means more than one person is travelling in a vehicle (a carpool, for example). We can also have the case where one person is driving a car and a trailer ($r = 1/2$).

Data Rate Versus Signal Rate

The **data rate** defines the number of data elements (bits) sent in 1s. The unit is bits per second (bps). The **signal rate** is the number of signal elements sent in 1s. The unit is the baud. There are several common terminologies used in the literature. The data rate is sometimes called the **bit rate;** the signal rate is sometimes called the **pulse rate,** the **modulation rate,** or the **baud rate.**

One goal in data communications is to increase the data rate while decreasing the signal rate. Increasing the data rate increases the speed of transmission; decreasing the signal rate decreases the bandwidth requirement. In our vehicle-people analogy, we need to carry more people in fewer vehicles to prevent traffic jams. We have a limited *bandwidth* in our transportation system.

We now need to consider the relationship between data rate (N) and signal rate (S)

$$S = N/r$$

in which r has been previously defined. This relationship, of course, depends on the value of r. It also depends on the data pattern. If we have a data pattern of all 1s or all 0s, the signal rate may be different from a data pattern of alternating 0s and 1s. To

derive a formula for the relationship, we need to define three cases: the worst, best, and average. The worst case is when we need the maximum signal rate; the best case is when we need the minimum. In data communications, we are usually interested in the average case. We can formulate the relationship between data rate and signal rate as

$$S_{ave} = c \times N \times (1/r) \qquad \text{baud}$$

where N is the data rate (bps); c is the case factor, which varies for each case; S is the number of signal elements per second; and r is the previously defined factor.

Example 4.1

A signal is carrying data in which one data element is encoded as one signal element ($r = 1$). If the bit rate is 100 kbps, what is the average value of the baud rate if c is between 0 and 1?

Solution

We assume that the average value of c is 1/2. The baud rate is then

$$S = c \times N \times (1 / r) = 1/2 \times 100{,}000 \times (1/1) = 50{,}000 = 50 \text{ kbaud}$$

Bandwidth

We discussed in Chapter 3 that a digital signal that carries information is nonperiodic. We also showed that the bandwidth of a nonperiodic signal is continuous with an infinite range. However, most digital signals we encounter in real life have a bandwidth with finite values. In other words, the bandwidth is theoretically infinite, but many of the components have such a small amplitude that they can be ignored. The effective bandwidth is finite. From now on, when we talk about the bandwidth of a digital signal, we need to remember that we are talking about this effective bandwidth.

Although the actual bandwidth of a digital signal is infinite, the effective bandwidth is finite.

We can say that the baud rate, not the bit rate, determines the required bandwidth for a digital signal. If we use the transportation analogy, the number of vehicles, not the number of people being carried, affects the traffic. More changes in the signal mean injecting more frequencies into the signal. (Recall that frequency means change and change means frequency.) The bandwidth reflects the range of frequencies we need. There is a relationship between the baud rate (signal rate) and the bandwidth. Bandwidth is a complex idea. When we talk about the bandwidth, we normally define a range of frequencies. We need to know where this range is located as well as the values of the lowest and the highest frequencies. In addition, the amplitude (if not the phase) of each component is an important issue. In other words, we need more information about the bandwidth than just its value; we need a diagram of the bandwidth. We will show the bandwidth for most schemes we discuss in the chapter. For the moment, we can say that the bandwidth (range of frequencies) is proportional to the signal rate (baud rate). The minimum bandwidth can be given as

$$B_{min} = c \times N \times (1 / r)$$

We can solve for the maximum data rate if the bandwidth of the channel is given.

$$N_{max} = (1/c) \times B \times r$$

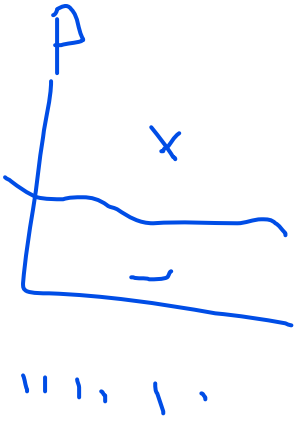

Example 4.2

The maximum data rate of a channel (see Chapter 3) is $N_{max} = 2 \times B \times \log_2 L$ (defined by the Nyquist formula). Does this agree with the previous formula for N_{max}?

Solution

A signal with L levels actually can carry $\log_2 L$ bits per level. If each level corresponds to one signal element and we assume the average case ($c = 1/2$), then we have

$$N_{max} = (1/c) \times B \times r = 2 \times B \times \log_2 L$$

Baseline Wandering

In decoding a digital signal, the receiver calculates a running average of the received signal power. This average is called the ***baseline***. The incoming signal power is evaluated against this baseline to determine the value of the data element. A long string of 0s or 1s can cause a drift in the baseline (**baseline wandering**) and make it difficult for the receiver to decode correctly. A good line coding scheme needs to prevent baseline wandering.

DC Components

When the voltage level in a digital signal is constant for a while, the spectrum creates very low frequencies (results of Fourier analysis). These frequencies around zero, called DC (direct-current) *components*, present problems for a system that cannot pass low frequencies or a system that uses electrical coupling (via a transformer). We can say that DC component means 0/1 parity that can cause base-line wondering. For example, a telephone line cannot pass frequencies below 200 Hz. Also a long-distance link may use one or more transformers to isolate different parts of the line electrically. For these systems, we need a scheme with no **DC component.**

Self-synchronization

To correctly interpret the signals received from the sender, the receiver's bit intervals must correspond exactly to the sender's bit intervals. If the receiver clock is faster or slower, the bit intervals are not matched and the receiver might misinterpret the signals. Figure 4.3 shows a situation in which the receiver has a shorter bit duration. The sender sends 10110001, while the receiver receives 110111000011.

A **self-synchronizing** digital signal includes timing information in the data being transmitted. This can be achieved if there are transitions in the signal that alert the receiver to the beginning, middle, or end of the pulse. If the receiver's clock is out of synchronization, these points can reset the clock.

Example 4.3

In a digital transmission, the receiver clock is 0.1 percent faster than the sender clock. How many extra bits per second does the receiver receive if the data rate is 1 kbps? How many if the data rate is 1 Mbps?

Solution

At 1 kbps, the receiver receives 1001 bps instead of 1000 bps.

Figure 4.3 *Effect of lack of synchronization*

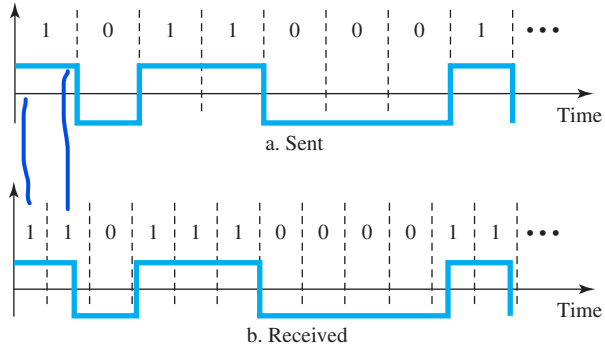

1000 bits sent → 1001 bits received → 1 extra bps

At 1 Mbps, the receiver receives 1,001,000 bps instead of 1,000,000 bps.

1,000,000 bits sent → 1,001,000 bits received → 1000 extra bps

Built-in Error Detection

It is desirable to have a built-in error-detecting capability in the generated code to detect some or all of the errors that occurred during transmission. Some encoding schemes that we will discuss have this capability to some extent.

Immunity to Noise and Interference

Another desirable code characteristic is a code that is immune to noise and other interferences. Some encoding schemes that we will discuss have this capability.

Complexity

A complex scheme is more costly to implement than a simple one. For example, a scheme that uses four signal levels is more difficult to interpret than one that uses only two levels.

4.1.2 Line Coding Schemes

We can roughly divide line coding schemes into five broad categories, as shown in Figure 4.4.

There are several schemes in each category. We need to be familiar with all schemes discussed in this section to understand the rest of the book. This section can be used as a reference for schemes encountered later.

Unipolar Scheme

In a **unipolar** scheme, all the signal levels are on one side of the time axis, either above or below.

Figure 4.4 *Line coding schemes*

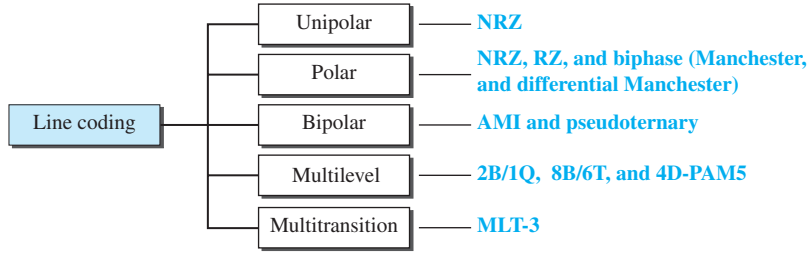

NRZ (Non-Return-to-Zero)

Traditionally, a unipolar scheme was designed as a **non-return-to-zero (NRZ)** scheme in which the positive voltage defines bit 1 and the zero voltage defines bit 0. It is called NRZ because the signal does not return to zero at the middle of the bit. Figure 4.5 shows a unipolar NRZ scheme.

Figure 4.5 *Unipolar NRZ scheme*

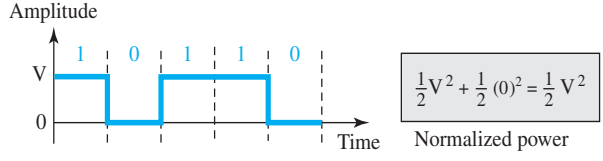

Compared with its polar counterpart (see the next section), this scheme is very costly. As we will see shortly, the normalized power (the power needed to send 1 bit per unit line resistance) is double that for polar NRZ. For this reason, this scheme is normally not used in data communications today.

Polar Schemes

In **polar** schemes, the voltages are on both sides of the time axis. For example, the voltage level for 0 can be positive and the voltage level for 1 can be negative.

Non-Return-to-Zero (NRZ)

In **polar NRZ** encoding, we use two levels of voltage amplitude. We can have two versions of polar NRZ: NRZ-L and NRZ-I, as shown in Figure 4.6. The figure also shows the value of *r*, the average baud rate, and the bandwidth. In the first variation, NRZ-L (**NRZ-Level**), the level of the voltage determines the value of the bit. In the second variation, NRZ-I (**NRZ-Invert**), the change or lack of change in the level of the voltage determines the value of the bit. If there is no change, the bit is 0; if there is a change, the bit is 1.

B = N/2

Figure 4.6 *Polar NRZ-L and NRZ-I schemes*

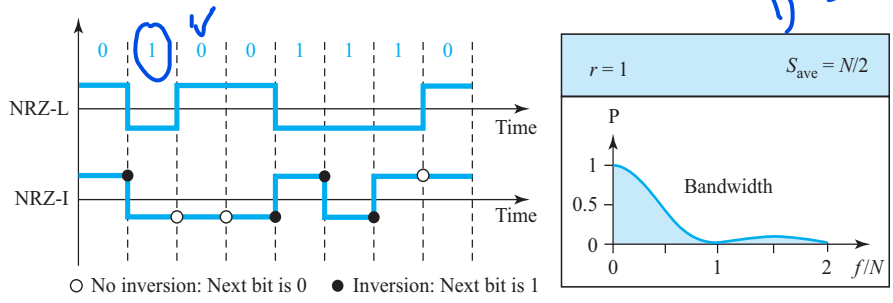

In NRZ-L the level of the voltage determines the value of the bit. In NRZ-I the inversion or the lack of inversion determines the value of the bit.

Let us compare these two schemes based on the criteria we previously defined. Although baseline wandering is a problem for both variations, it is twice as severe in NRZ-L. If there is a long sequence of 0s or 1s in NRZ-L, the average signal power becomes skewed. The receiver might have difficulty discerning the bit value. In NRZ-I this problem occurs only for a long sequence of 0s. If somehow we can eliminate the long sequence of 0s, we can avoid baseline wandering. We will see shortly how this can be done.

The synchronization problem (sender and receiver clocks are not synchronized) also exists in both schemes. Again, this problem is more serious in NRZ-L than in NRZ-I. While a long sequence of 0s can cause a problem in both schemes, a long sequence of 1s affects only NRZ-L.

Another problem with NRZ-L occurs when there is a sudden change of polarity in the system. For example, if twisted-pair cable is the medium, a change in the polarity of the wire results in all 0s interpreted as 1s and all 1s interpreted as 0s. NRZ-I does not have this problem. Both schemes have an average signal rate of $N/2$ Bd.

NRZ-L and NRZ-I both have an average signal rate of $N/2$ Bd.

Let us discuss the bandwidth. Figure 4.6 also shows the normalized bandwidth for both variations. The vertical axis shows the power density (the power for each 1 Hz of bandwidth); the horizontal axis shows the frequency. The bandwidth reveals a very serious problem for this type of encoding. The value of the power density is very high around frequencies close to zero. This means that there are DC components that carry a high level of energy. As a matter of fact, most of the energy is concentrated in frequencies between 0 and $N/2$. This means that although the average of the signal rate is $N/2$, the energy is not distributed evenly between the two halves.

NRZ-L and NRZ-I both have a DC component problem.

Example 4.4

A system is using NRZ-I to transfer 10-Mbps data. What are the average signal rate and minimum bandwidth?

Solution

The average signal rate is $S = N/2 = 500$ kbaud. The minimum bandwidth for this average baud rate is $B_{min} = S = 500$ kHz.

$B_{min} = c\,N\,\frac{1}{r}$

Return-to-Zero (RZ)

The main problem with NRZ encoding occurs when the sender and receiver clocks are not synchronized. The receiver does not know when one bit has ended and the next bit is starting. One solution is the **return-to-zero (RZ)** scheme, which uses three values: positive, negative, and zero. In RZ, the signal changes not between bits but during the bit. In Figure 4.7 we see that the signal goes to 0 in the middle of each bit. It remains there until the beginning of the next bit. The main disadvantage of RZ encoding is that it requires two signal changes to encode a bit and therefore occupies greater bandwidth. The same problem we mentioned, a sudden change of polarity resulting in all 0s interpreted as 1s and all 1s interpreted as 0s, still exists here, but there is no DC component problem. Another problem is the complexity: RZ uses three levels of voltage, which is more complex to create and discern. As a result of all these deficiencies, the scheme is not used today. Instead, it has been replaced by the better-performing Manchester and differential Manchester schemes (discussed next).

Figure 4.7 *Polar RZ scheme*

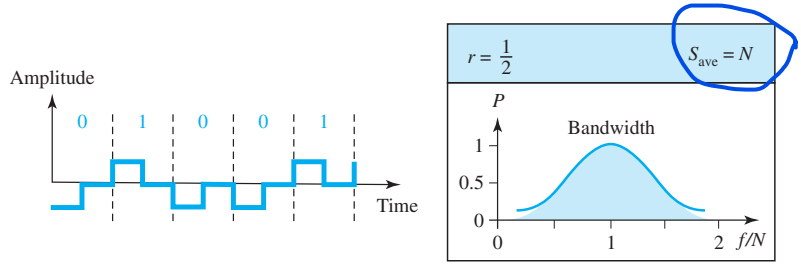

Biphase: Manchester and Differential Manchester

The idea of RZ (transition at the middle of the bit) and the idea of NRZ-L are combined into the **Manchester** scheme. In Manchester encoding, the duration of the bit is divided into two halves. The voltage remains at one level during the first half and moves to the other level in the second half. The transition at the middle of the bit provides synchronization. **Differential Manchester,** on the other hand, combines the ideas of RZ and NRZ-I. There is always a transition at the middle of the bit, but the bit values are determined at the beginning of the bit. If the next bit is 0, there is a transition; if the next bit is 1, there is none. Figure 4.8 shows both Manchester and differential Manchester encoding.

The Manchester scheme overcomes several problems associated with NRZ-L, and differential Manchester overcomes several problems associated with NRZ-I. First, there

Figure 4.8 *Polar biphase: Manchester and differential Manchester schemes*

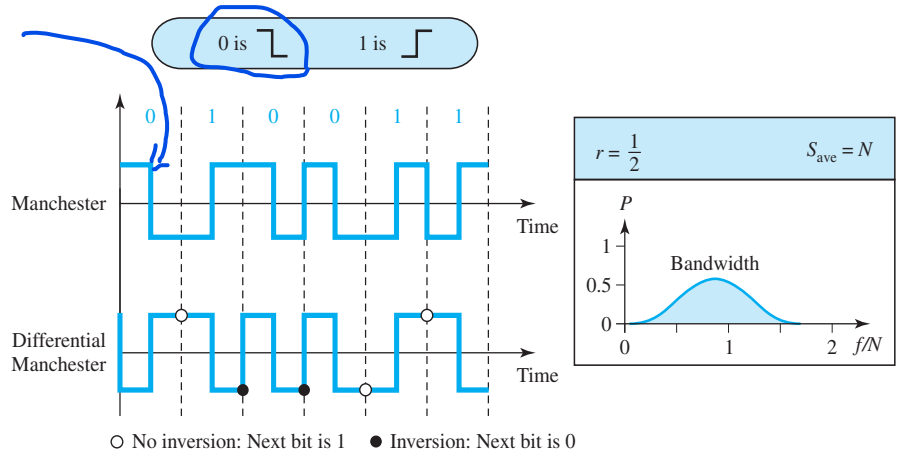

In Manchester and differential Manchester encoding, the transition at the middle of the bit is used for synchronization.

is no baseline wandering. There is no DC component because each bit has a positive and negative voltage contribution. The only drawback is the signal rate. The signal rate for Manchester and differential Manchester is double that for NRZ. The reason is that there is always one transition at the middle of the bit and maybe one transition at the end of each bit. Figure 4.8 shows both Manchester and differential Manchester encoding schemes. Note that Manchester and differential Manchester schemes are also called **biphase** schemes.

The minimum bandwidth of Manchester and differential Manchester is 2 times that of NRZ.

Bipolar Schemes

In **bipolar** encoding (sometimes called ***multilevel binary***), there are three voltage levels: positive, negative, and zero. The voltage level for one data element is at zero, while the voltage level for the other element alternates between positive and negative.

In bipolar encoding, we use three levels: positive, zero, and negative.

AMI and Pseudoternary

Figure 4.9 shows two variations of bipolar encoding: AMI and pseudoternary. A common bipolar encoding scheme is called bipolar **alternate mark inversion (AMI).** In the term *alternate mark inversion,* the word *mark* comes from telegraphy and means 1. So AMI means alternate 1 inversion. A neutral zero voltage represents binary 0. Binary

1s are represented by alternating positive and negative voltages. A variation of AMI encoding is called **pseudoternary** in which the 1 bit is encoded as a zero voltage and the 0 bit is encoded as alternating positive and negative voltages.

Figure 4.9 *Bipolar schemes: AMI and pseudoternary*

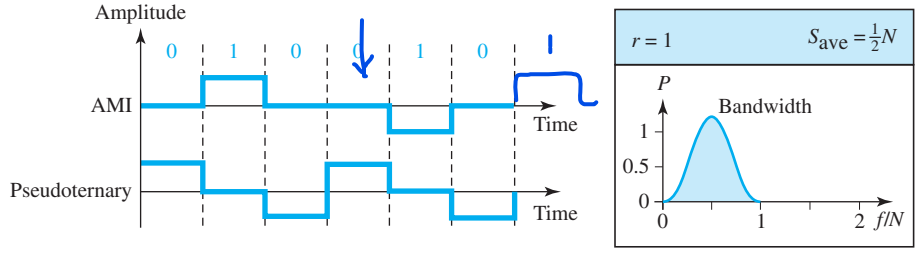

The bipolar scheme was developed as an alternative to NRZ. The bipolar scheme has the same signal rate as NRZ, but there is no DC component. The NRZ scheme has most of its energy concentrated near zero frequency, which makes it unsuitable for transmission over channels with poor performance around this frequency. The concentration of the energy in bipolar encoding is around frequency $N/2$. Figure 4.9 shows the typical energy concentration for a bipolar scheme.

One may ask why we do not have a DC component in bipolar encoding. We can answer this question by using the Fourier transform, but we can also think about it intuitively. If we have a long sequence of 1s, the voltage level alternates between positive and negative; it is not constant. Therefore, there is no DC component. For a long sequence of 0s, the voltage remains constant, but its amplitude is zero, which is the same as having no DC component. In other words, a sequence that creates a constant zero voltage does not have a DC component.

AMI is commonly used for long-distance communication, but it has a synchronization problem when a long sequence of 0s is present in the data. Later in the chapter, we will see how a scrambling technique can solve this problem.

Multilevel Schemes

The desire to increase the data rate or decrease the required bandwidth has resulted in the creation of many schemes. The goal is to increase the number of bits per baud by encoding a pattern of m data elements into a pattern of n signal elements. We only have two types of data elements (0s and 1s), which means that a group of m data elements can produce a combination of 2^m data patterns. We can have different types of signal elements by allowing different signal levels. If we have L different levels, then we can produce L^n combinations of signal patterns. If $2^m = L^n$, then each data pattern is encoded into one signal pattern. If $2^m < L^n$, data patterns occupy only a subset of signal patterns. The subset can be carefully designed to prevent baseline wandering, to provide synchronization, and to detect errors that occurred during data transmission. Data encoding is not possible if $2^m > L^n$ because some of the data patterns cannot be encoded.

The code designers have classified these types of coding as *mBnL*, where *m* is the length of the binary pattern, *B* means binary data, *n* is the length of the signal pattern, and *L* is the number of levels in the signaling. A letter is often used in place of *L*: *B* (binary) for $L = 2$, *T* (ternary) for $L = 3$, and *Q* (quaternary) for $L = 4$. Note that the first two letters define the data pattern, and the second two define the signal pattern.

In *mBnL* schemes, a pattern of *m* data elements is encoded as a pattern of *n* signal elements in which $2^m \leq L^n$.

2B1Q

The first *mBnL* scheme we discuss, **two binary, one quaternary (2B1Q),** uses data patterns of size 2 and encodes the 2-bit patterns as one signal element belonging to a four-level signal. In this type of encoding $m = 2$, $n = 1$, and $L = 4$ (quaternary). Figure 4.10 shows an example of a 2B1Q signal.

Figure 4.10 *Multilevel: 2B1Q scheme*

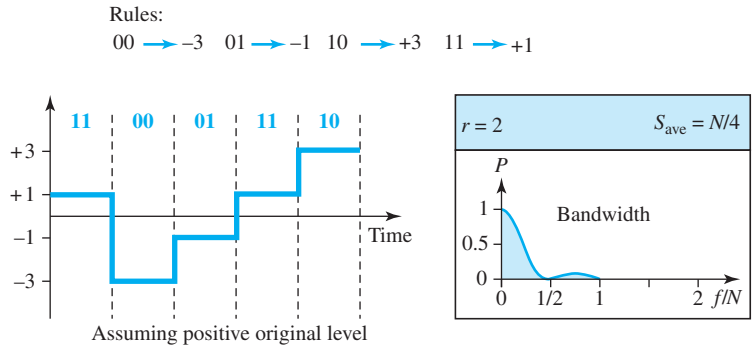

The average signal rate of 2B1Q is $S = N/4$. This means that using 2B1Q, we can send data 2 times faster than by using NRZ-L. However, 2B1Q uses four different signal levels, which means the receiver has to discern four different thresholds. The reduced bandwidth comes with a price. There are no redundant signal patterns in this scheme because $2^2 = 4^1$.

The 2B1Q scheme is used in DSL (Digital Subscriber Line) technology to provide a high-speed connection to the Internet by using subscriber telephone lines (see Chapter 14).

8B6T

A very interesting scheme is **eight binary, six ternary (8B6T).** This code is used with 100BASE-4T cable, as we will see in Chapter 13. The idea is to encode a pattern of 8 bits as a pattern of six signal elements, where the signal has three levels (ternary). In this type of scheme, we can have $2^8 = 256$ different data patterns and $3^6 = 729$ different signal patterns. The mapping table is shown in Appendix F. There are $729 - 256 = 473$ redundant signal elements that provide synchronization and error detection. Part of the

redundancy is also used to provide DC balance. Each signal pattern has a weight of 0 or +1 DC values. This means that there is no pattern with the weight –1. To make the whole stream DC-balanced, the sender keeps track of the weight. If two groups of weight 1 are encountered one after another, the first one is sent as is, while the next one is totally inverted to give a weight of –1.

Figure 4.11 shows an example of three data patterns encoded as three signal patterns. The three possible signal levels are represented as –, 0, and +. The first 8-bit pattern 00010001 is encoded as the signal pattern – 0 – 0 + + with weight 0; the second 8-bit pattern 01010011 is encoded as – + – + + 0 with weight +1. The third 8-bit pattern 01010000 should be encoded as + – – + 0 + with weight +1. To create DC balance, the sender inverts the actual signal. The receiver can easily recognize that this is an inverted pattern because the weight is –1. The pattern is inverted before decoding.

Figure 4.11 *Multilevel: 8B6T scheme*

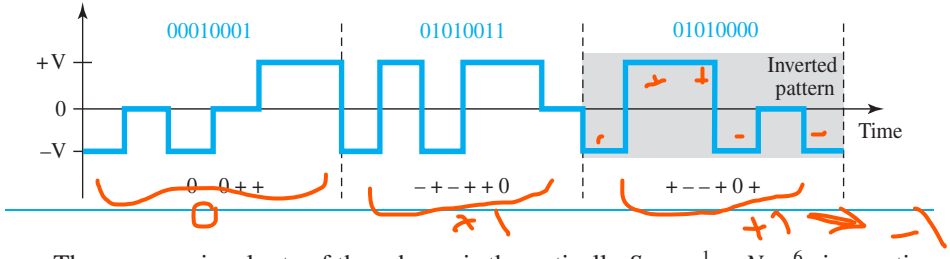

The average signal rate of the scheme is theoretically $S_{ave} = \frac{1}{2} \times N \times \frac{6}{8}$; in practice the minimum bandwidth is very close to $6N/8$.

4D-PAM5

The last signaling scheme we discuss in this category is called **four-dimensional five-level pulse amplitude modulation (4D-PAM5).** The 4D means that data is sent over four wires at the same time. It uses five voltage levels, such as –2, –1, 0, 1, and 2. However, one level, level 0, is used only for forward error detection (discussed in Chapter 10). If we assume that the code is just one-dimensional, the four levels create something similar to 8B4Q. In other words, an 8-bit word is translated to a signal element of four different levels. The worst signal rate for this imaginary one-dimensional version is $N \times 4/8$, or $N/2$.

The technique is designed to send data over four channels (four wires). This means the signal rate can be reduced to $N/8$, a significant achievement. All 8 bits can be fed into a wire simultaneously and sent by using one signal element. The point here is that the four signal elements comprising one signal group are sent simultaneously in a four-dimensional setting. Figure 4.12 shows the imaginary one-dimensional and the actual four-dimensional implementation. Gigabit LANs (see Chapter 13) use this technique to send 1-Gbps data over four copper cables that can handle 125 Mbaud. This scheme has a lot of redundancy in the signal pattern because 2^8 data patterns are matched to $4^4 = 256$ signal patterns. The extra signal patterns can be used for other purposes such as error detection.

Figure 4.12 *Multilevel: 4D-PAM5 scheme*

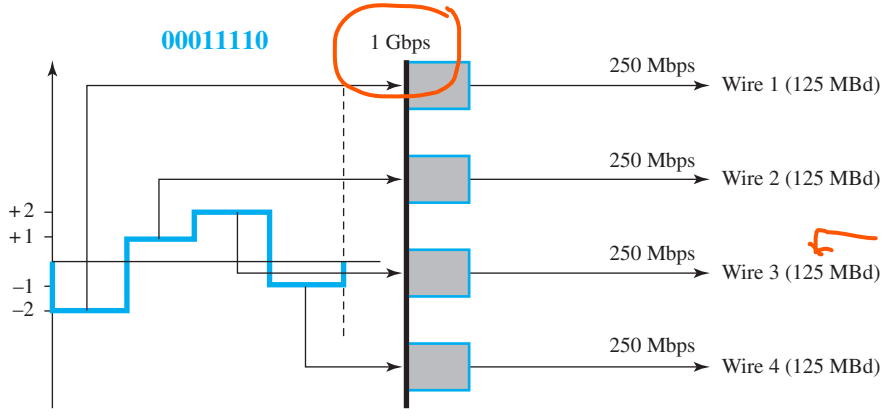

$S = \frac{N}{8}$

$S = \frac{G}{8}$

Multitransition: MLT-3

NRZ-I and differential Manchester are classified as differential encoding but use two transition rules to encode binary data (no inversion, inversion). If we have a signal with more than two levels, we can design a differential encoding scheme with more than two transition rules. MLT-3 is one of them. The **multiline transmission, three-level (MLT-3) scheme uses** three levels ($+V$, 0, and $-V$) and three transition rules to move between the levels.

1. If the next bit is 0, there is no transition.
2. If the next bit is 1 and the current level is not 0, the next level is 0.
3. If the next bit is 1 and the current level is 0, the next level is the opposite of the last nonzero level.

The behavior of MLT-3 can best be described by the state diagram shown in Figure 4.13. The three voltage levels ($-V$, 0, and $+V$) are shown by three states (ovals). The transition from one state (level) to another is shown by the connecting lines. Figure 4.13 also shows two examples of an MLT-3 signal.

One might wonder why we need to use MLT-3, a scheme that maps one bit to one signal element. The signal rate is the same as that for NRZ-I, but with greater complexity (three levels and complex transition rules). It turns out that the shape of the signal in this scheme helps to reduce the required bandwidth. Let us look at the worst-case scenario, a sequence of 1s. In this case, the signal element pattern $+V0-V0$ is repeated every 4 bits. A nonperiodic signal has changed to a periodic signal with the period equal to 4 times the bit duration. This worst-case situation can be simulated as an analog signal with a frequency one-fourth of the bit rate. In other words, the signal rate for MLT-3 is one-fourth the bit rate. This makes MLT-3 a suitable choice when we need to send 100 Mbps on a copper wire that cannot support more than 32 MHz (frequencies above this level create electromagnetic emissions). MLT-3 and LANs are discussed in Chapter 13.

Figure 4.13 *Multitransition: MLT-3 scheme*

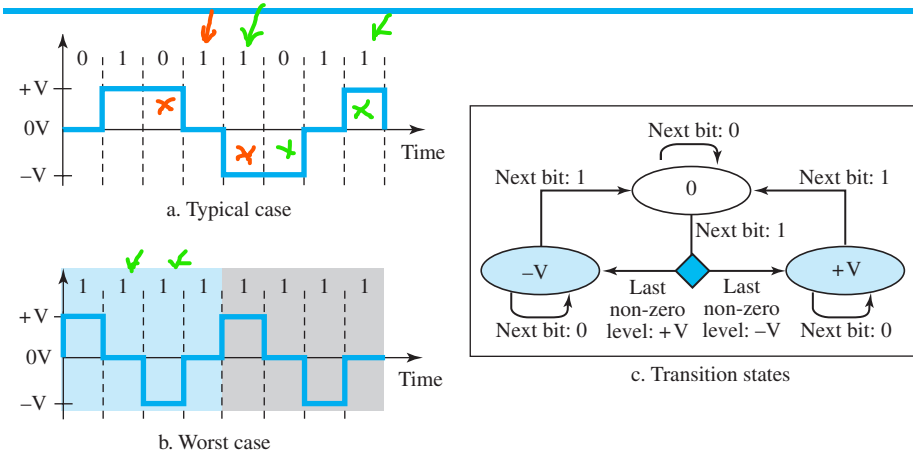

Summary of Line Coding Schemes

We summarize in Table 4.1 the characteristics of the different schemes discussed.

Table 4.1 *Summary of line coding schemes*

Category	*Scheme*	*Bandwidth (average)*	*Characteristics*
Unipolar	NRZ	$B = N/2$	Costly, no self-synchronization if long 0s or 1s, DC
Polar	NRZ-L	$B = N/2$	No self-synchronization if long 0s or 1s, DC
	NRZ-I	$B = N/2$	No self-synchronization for long 0s, DC
	Biphase	$B = N$	Self-synchronization, no DC, high bandwidth
Bipolar	AMI	$B = N/2$	No self-synchronization for long 0s, DC
Multilevel	2B1Q	$B = N/4$	No self-synchronization for long same double bits
	8B6T	$B = 3N/4$	Self-synchronization, no DC
	4D-PAM5	$B = N/8$	Self-synchronization, no DC
Multitransition	MLT-3	$B = N/3$	No self-synchronization for long 0s

4.1.3 Block Coding

We need redundancy to ensure synchronization and to provide some kind of inherent error detecting. Block coding can give us this redundancy and improve the performance of line coding. In general, **block coding** changes a block of m bits into a block of n bits, where n is larger than m. Block coding is referred to as an mB/nB encoding technique.

Block coding is normally referred to as *mB/nB* coding; it replaces each *m*-bit group with an *n*-bit group.

The slash in block encoding (for example, 4B/5B) distinguishes block encoding from multilevel encoding (for example, 8B6T), which is written without a slash. Block coding normally involves three steps: division, substitution, and combination. In the division step, a sequence of bits is divided into groups of *m* bits. For example, in 4B/5B encoding, the original bit sequence is divided into 4-bit groups. The heart of block coding is the substitution step. In this step, we substitute an *m*-bit group with an *n*-bit group. For example, in 4B/5B encoding we substitute a 4-bit group with a 5-bit group. Finally, the *n*-bit groups are combined to form a stream. The new stream has more bits than the original bits. Figure 4.14 shows the procedure.

Figure 4.14 *Block coding concept*

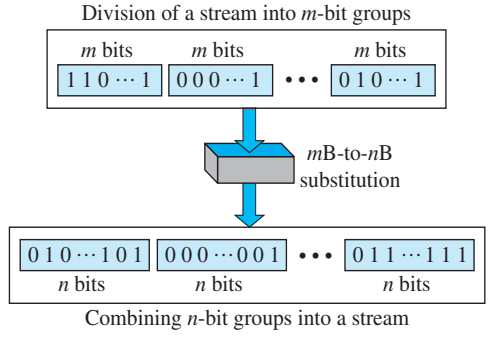

4B/5B

The **four binary/five binary (4B/5B)** coding scheme was designed to be used in combination with NRZ-I. Recall that NRZ-I has a good signal rate, one-half that of the biphase, but it has a synchronization problem. A long sequence of 0s can make the receiver clock lose synchronization. One solution is to change the bit stream, prior to encoding with NRZ-I, so that it does not have a long stream of 0s. The 4B/5B scheme achieves this goal. The block-coded stream does not have more that three consecutive 0s, as we will see later. At the receiver, the NRZ-I encoded digital signal is first decoded into a stream of bits and then decoded to remove the redundancy. Figure 4.15 shows the idea.

Figure 4.15 *Using block coding 4B/5B with NRZ-I line coding scheme*

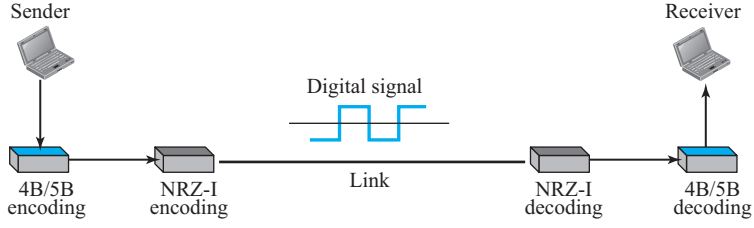

In 4B/5B, the 5-bit output that replaces the 4-bit input has no more than one leading zero (left bit) and no more than two trailing zeros (right bits). So when different groups are combined to make a new sequence, there are never more than three consecutive 0s. (Note that NRZ-I has no problem with sequences of 1s.) Table 4.2 shows the corresponding pairs used in 4B/5B encoding. Note that the first two columns pair a 4-bit group with a 5-bit group. A group of 4 bits can have only 16 different combinations while a group of 5 bits can have 32 different combinations. This means that there are 16 groups that are not used for 4B/5B encoding. Some of these unused groups are used for control purposes; the others are not used at all. The latter provide a kind of error detection. If a 5-bit group arrives that belongs to the unused portion of the table, the receiver knows that there is an error in the transmission.

Table 4.2 *4B/5B mapping codes*

Data Sequence	*Encoded Sequence*	*Control Sequence*	*Encoded Sequence*
0000	11110	Q (Quiet)	00000
0001	01001	I (Idle)	11111
0010	10100	H (Halt)	00100
0011	10101	J (Start delimiter)	11000
0100	01010	K (Start delimiter)	10001
0101	01011	T (End delimiter)	01101
0110	01110	S (Set)	11001
0111	01111	R (Reset)	00111
1000	10010		
1001	10011		
1010	10110		
1011	10111		
1100	11010		
1101	11011		
1110	11100		
1111	11101		

Figure 4.16 shows an example of substitution in 4B/5B coding. 4B/5B encoding solves the problem of synchronization and overcomes one of the deficiencies of NRZ-I. However, we need to remember that it increases the signal rate of NRZ-I. The redundant bits add 20 percent more baud. Still, the result is less than the biphase scheme which has a signal rate of 2 times that of NRZ-I. However, 4B/5B block encoding does not solve the DC component problem of NRZ-I. If a DC component is unacceptable, we need to use biphase or bipolar encoding.

Example 4.5

We need to send data at a 1-Mbps rate. What is the minimum required bandwidth, using a combination of 4B/5B and NRZ-I or Manchester coding?

Solution

First 4B/5B block coding increases the bit rate to 1.25 Mbps. The minimum bandwidth using NRZ-I is $N/2$ or 625 kHz. The Manchester scheme needs a minimum bandwidth of 1 MHz. The

Figure 4.16 *Substitution in 4B/5B block coding*

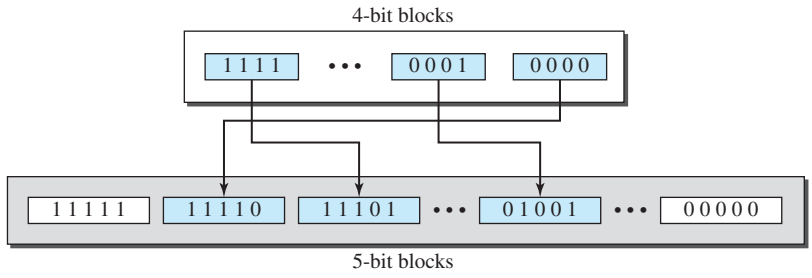

first choice needs a lower bandwidth, but has a DC component problem; the second choice needs a higher bandwidth, but does not have a DC component problem.

8B/10B

The **eight binary/ten binary (8B/10B)** encoding is similar to 4B/5B encoding except that a group of 8 bits of data is now substituted by a 10-bit code. It provides greater error detection capability than 4B/5B. The 8B/10B block coding is actually a combination of 5B/6B and 3B/4B encoding, as shown in Figure 4.17.

Figure 4.17 *8B/10B block encoding*

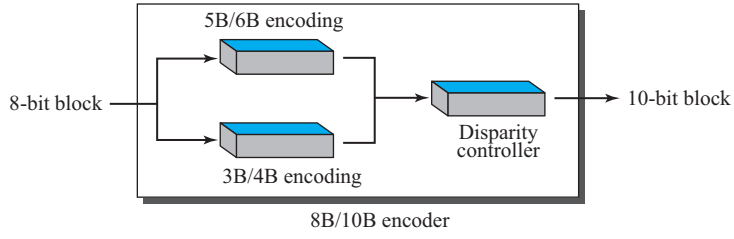

The five most significant bits of a 10-bit block are fed into the 5B/6B encoder; the three least significant bits are fed into a 3B/4B encoder. The split is done to simplify the mapping table. To prevent a long run of consecutive 0s or 1s, the code uses a disparity controller which keeps track of excess 0s over 1s (or 1s over 0s). If the bits in the current block create a disparity that contributes to the previous disparity (either direction), then each bit in the code is complemented (a 0 is changed to a 1 and a 1 is changed to a 0). The coding has $2^{10} - 2^8 = 768$ redundant groups that can be used for disparity checking and error detection. In general, the technique is superior to 4B/5B because of better built-in error-checking capability and better synchronization.

4.1.4 Scrambling

Biphase schemes that are suitable for dedicated links between stations in a LAN are not suitable for long-distance communication because of their wide bandwidth requirement. The combination of block coding and NRZ line coding is not suitable for long-distance encoding either, because of the DC component. Bipolar AMI encoding, on the other hand, has a narrow bandwidth and does not create a DC component. However, a long sequence of 0s upsets the synchronization. If we can find a way to avoid a long sequence of 0s in the original stream, we can use bipolar AMI for long distances. We are looking for a technique that does not increase the number of bits and does provide synchronization. We are looking for a solution that substitutes long zero-level pulses with a combination of other levels to provide synchronization. One solution is called **scrambling.** We modify part of the AMI rule to include scrambling, as shown in Figure 4.18. Note that scrambling, as opposed to block coding, is done at the same time as encoding. The system needs to insert the required pulses based on the defined scrambling rules. Two common scrambling techniques are B8ZS and HDB3.

Figure 4.18 *AMI used with scrambling*

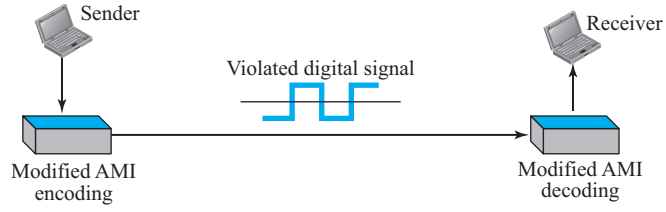

B8ZS

Bipolar with 8-zero substitution (B8ZS) is commonly used in North America. In this technique, eight consecutive zero-level voltages are replaced by the sequence **000VB0VB.** The V in the sequence denotes *violation;* this is a nonzero voltage that breaks an AMI rule of encoding (opposite polarity from the previous). The B in the sequence denotes *bipolar,* which means a nonzero level voltage in accordance with the AMI rule. There are two cases, as shown in Figure 4.19.

Figure 4.19 *Two cases of B8ZS scrambling technique*

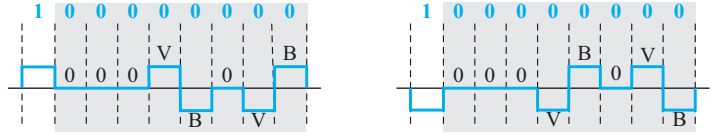

a. Previous level is positive. b. Previous level is negative.

Note that the scrambling in this case does not change the bit rate. Also, the technique balances the positive and negative voltage levels (two positives and two negatives), which means that the DC balance is maintained. Note that the substitution may change the polarity of a 1 because, after the substitution, AMI needs to follow its rules.

B8ZS substitutes eight consecutive zeros with 000VB0VB.

One more point is worth mentioning. The letter V (violation) or B (bipolar) here is relative. The V means the same polarity as the polarity of the previous nonzero pulse; B means the polarity opposite to the polarity of the previous nonzero pulse.

HDB3

High-density bipolar 3-zero (HDB3) is commonly used outside of North America. In this technique, which is more conservative than B8ZS, four consecutive zero-level voltages are replaced with a sequence of **000V** or **B00V.** The reason for two different substitutions is to maintain the even number of nonzero pulses after each substitution. The two rules can be stated as follows:

1. If the number of nonzero pulses after the last substitution is odd, the substitution pattern will be **000V**, which makes the total number of nonzero pulses even.
2. If the number of nonzero pulses after the last substitution is even, the substitution pattern will be **B00V**, which makes the total number of nonzero pulses even.

Figure 4.20 shows an example.

Figure 4.20 *Different situations in HDB3 scrambling technique*

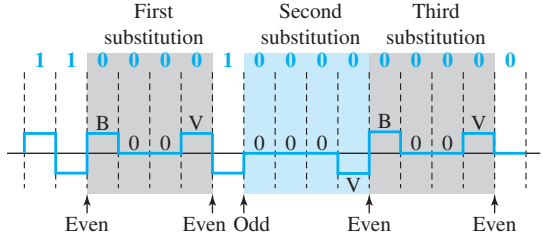

There are several points we need to mention here. First, before the first substitution, the number of nonzero pulses is even, so the first substitution is B00V. After this substitution, the polarity of the 1 bit is changed because the AMI scheme, after each substitution, must follow its own rule. After this bit, we need another substitution, which is 000V because we have only one nonzero pulse (odd) after the last substitution. The third substitution is B00V because there are no nonzero pulses after the second substitution (even).

HDB3 substitutes four consecutive zeros with 000V or B00V depending on the number of nonzero pulses after the last substitution.

4.2 ANALOG-TO-DIGITAL CONVERSION

The techniques described in Section 4.1 convert digital data to digital signals. Sometimes, however, we have an analog signal such as one created by a microphone or camera. We have seen in Chapter 3 that a digital signal is superior to an analog signal. The tendency today is to change an analog signal to digital data. In this section we describe two techniques, pulse code modulation and delta modulation. After the digital data are created (digitization), we can use one of the techniques described in Section 4.1 to convert the digital data to a digital signal.

4.2.1 Pulse Code Modulation (PCM)

The most common technique to change an analog signal to digital data (**digitization**) is called **pulse code modulation (PCM).** A PCM encoder has three processes, as shown in Figure 4.21.

Figure 4.21 *Components of PCM encoder*

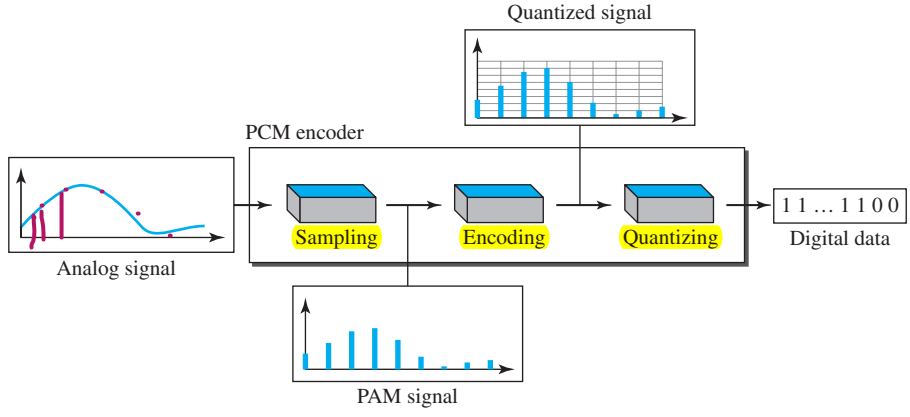

1. The analog signal is sampled.
2. The sampled signal is quantized.
3. The quantized values are encoded as streams of bits.

Sampling

The first step in PCM is **sampling.** The analog signal is sampled every T_s s, where T_s is the sample interval or period. The inverse of the sampling interval is called the ***sampling rate*** or ***sampling frequency*** and denoted by f_s, where $f_s = 1/T_s$. There are three sampling methods—ideal, natural, and flat-top—as shown in Figure 4.22.

In ideal sampling, pulses from the analog signal are sampled. This is an ideal sampling method and cannot be easily implemented. In natural sampling, a high-speed switch is turned on for only the small period of time when the sampling occurs. The result is a sequence of samples that retains the shape of the analog signal. The most

Figure 4.22 *Three different sampling methods for PCM*

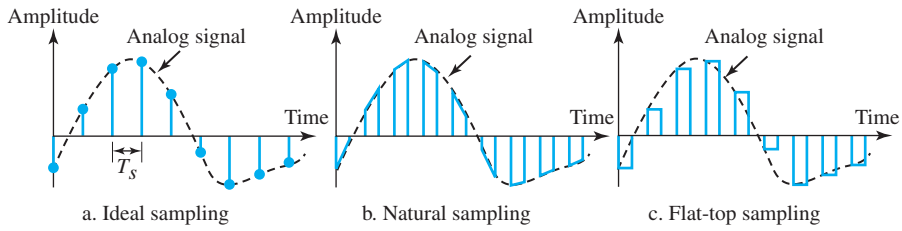

common sampling method, called ***sample and hold,*** however, creates flat-top samples by using a circuit.

The sampling process is sometimes referred to as **pulse amplitude modulation (PAM).** We need to remember, however, that the result is still an analog signal with nonintegral values.

Sampling Rate

One important consideration is the sampling rate or frequency. What are the restrictions on T_s? This question was elegantly answered by Nyquist. According to the **Nyquist theorem,** to reproduce the original analog signal, one necessary condition is that the *sampling rate* be at least twice the highest frequency in the original signal.

According to the Nyquist theorem, the sampling rate must be at least 2 times the highest frequency contained in the signal.

We need to elaborate on the theorem at this point. First, we can sample a signal only if the signal is band-limited. In other words, a signal with an infinite bandwidth cannot be sampled. Second, the sampling rate must be at least 2 times the highest frequency, not the bandwidth. If the analog signal is low-pass, the bandwidth and the highest frequency are the same value. If the analog signal is bandpass, the bandwidth value is lower than the value of the maximum frequency. Figure 4.23 shows the value of the sampling rate for two types of signals.

Example 4.6

For an intuitive example of the Nyquist theorem, let us sample a simple sine wave at three sampling rates: $f_s = 4f$ (2 times the Nyquist rate), $f_s = 2f$ (Nyquist rate), and $f_s = f$ (one-half the Nyquist rate). Figure 4.24 shows the sampling and the subsequent recovery of the signal.

It can be seen that sampling at the Nyquist rate can create a good approximation of the original sine wave (part a). Oversampling in part b can also create the same approximation, but it is redundant and unnecessary. Sampling below the Nyquist rate (part c) does not produce a signal that looks like the original sine wave.

Example 4.7

As an interesting example, let us see what happens if we sample a periodic event such as the revolution of a hand of a clock. The second hand of a clock has a period of 60 s. According to the

Figure 4.23 *Nyquist sampling rate for low-pass and bandpass signals*

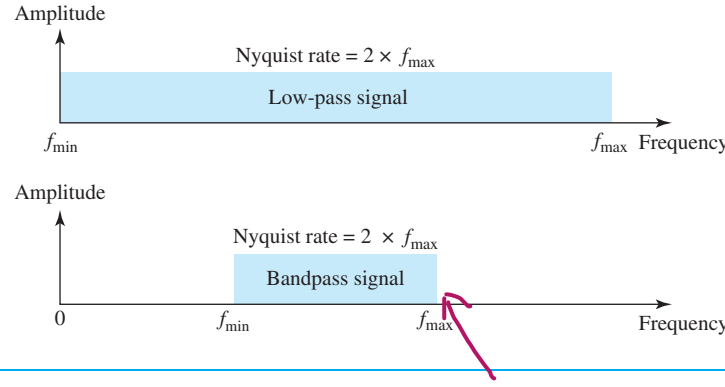

Figure 4.24 *Recovery of a sampled sine wave for different sampling rates*

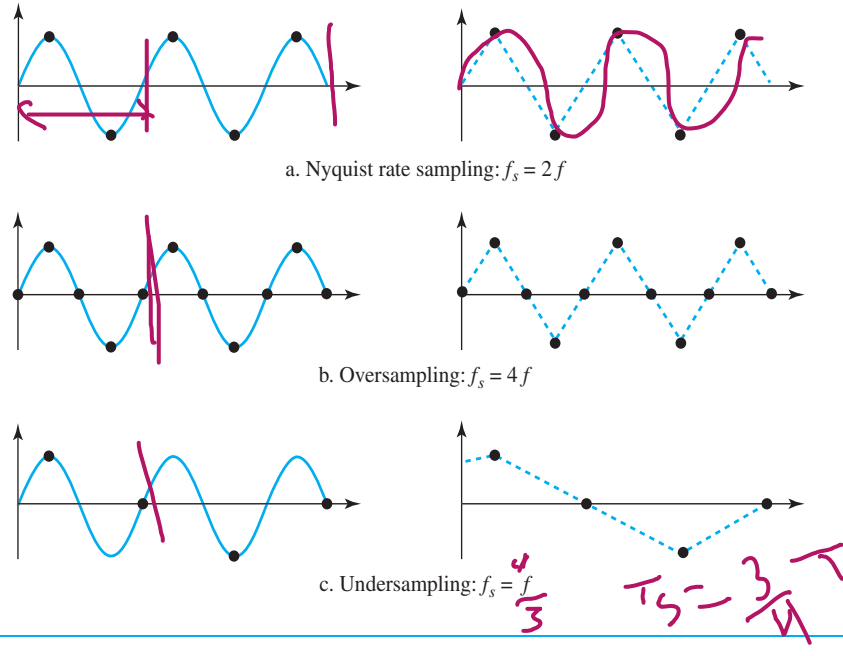

Nyquist theorem, we need to sample the hand (take and send a picture) every 30 s ($T_s = \frac{1}{2}T$ or $f_s = 2f$). In Figure 4.25a, the sample points, in order, are 12, 6, 12, 6, 12, and 6. The receiver of the samples cannot tell if the clock is moving forward or backward. In part b, we sample at double the Nyquist rate (every 15 s). The sample points, in order, are 12, 3, 6, 9, and 12. The clock is moving forward. In part c, we sample below the Nyquist rate ($T_s = \frac{3}{4}T$ or $f_s = \frac{4}{3}f$). The sample

Figure 4.25 *Sampling of a clock with only one hand*

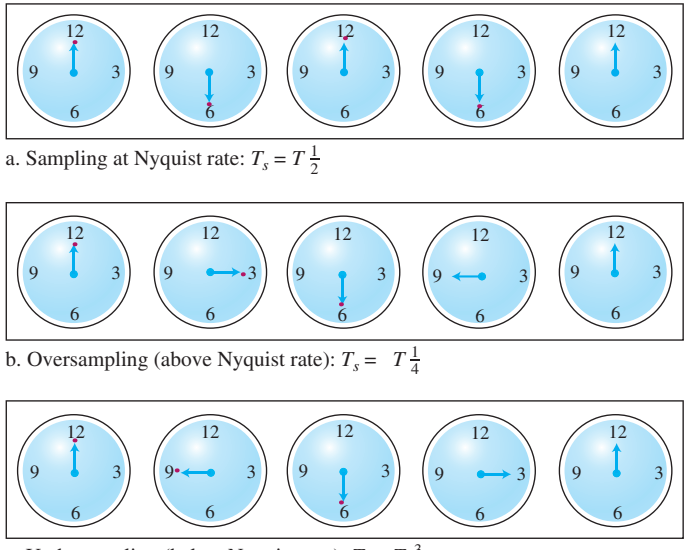

$f_s = 2f$

$f_s = 4f$

points, in order, are 12, 9, 6, 3, and 12. Although the clock is moving forward, the receiver thinks that the clock is moving backward.

Example 4.8

An example related to Example 4.7 is the seemingly backward rotation of the wheels of a forward-moving car in a movie. This can be explained by undersampling. A movie is filmed at 24 frames per second. If a wheel is rotating more than 12 times per second, the undersampling creates the impression of a backward rotation.

Example 4.9

Telephone companies digitize voice by assuming a maximum frequency of 4000 Hz. The sampling rate therefore is 8000 samples per second.

Example 4.10

A complex low-pass signal has a bandwidth of 200 kHz. What is the minimum sampling rate for this signal?

max

Solution

The bandwidth of a low-pass signal is between 0 and f, where f is the maximum frequency in the signal. Therefore, we can sample this signal at 2 times the highest frequency (200 kHz). The sampling rate is therefore 400,000 samples per second.

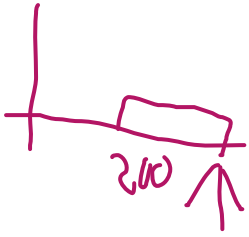

Example 4.11

max??

A complex bandpass signal has a bandwidth of 200 kHz. What is the minimum sampling rate for this signal?

Solution

We cannot find the minimum sampling rate in this case because we do not know where the bandwidth starts or ends. We do not know the maximum frequency in the signal.

Quantization

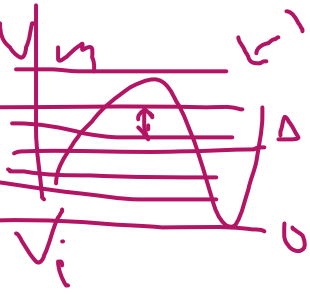

The result of sampling is a series of pulses with amplitude values between the maximum and minimum amplitudes of the signal. The set of amplitudes can be infinite with nonintegral values between the two limits. These values cannot be used in the encoding process. The following are the steps in quantization:

1. We assume that the original analog signal has instantaneous amplitudes between V_{min} and V_{max}.
2. We divide the range into L zones, each of height Δ (delta).

$$\Delta = \frac{V_{max} - V_{min}}{L} = \frac{40}{8} = 5$$

3. We assign quantized values of 0 to $L - 1$ to the midpoint of each zone.
4. We approximate the value of the sample amplitude to the quantized values.

As a simple example, assume that we have a sampled signal and the sample amplitudes are between −20 and +20 V. We decide to have eight levels ($L = 8$). This means that $\Delta = 5$ V. Figure 4.26 shows this example.

We have shown only nine samples using ideal sampling (for simplicity). The value at the top of each sample in the graph shows the actual amplitude. In the chart, the first row is the normalized value for each sample (actual amplitude/Δ). The quantization process selects the quantization value from the middle of each zone. This means that the normalized quantized values (second row) are different from the normalized amplitudes. The difference is called the *normalized error* (third row). The fourth row is the quantization code for each sample based on the quantization levels at the left of the graph. The encoded words (fifth row) are the final products of the conversion.

Quantization Levels

In the previous example, we showed eight quantization levels. The choice of L, the number of levels, depends on the range of the amplitudes of the analog signal and how accurately we need to recover the signal. If the amplitude of a signal fluctuates between two values only, we need only two levels; if the signal, like voice, has many amplitude values, we need more quantization levels. In audio digitizing, L is normally chosen to be 256; in video it is normally thousands. Choosing lower values of L increases the quantization error if there is a lot of fluctuation in the signal.

Quantization Error

One important issue is the error created in the quantization process. (Later, we will see how this affects high-speed modems.) Quantization is an approximation process. The

Figure 4.26 *Quantization and encoding of a sampled signal*

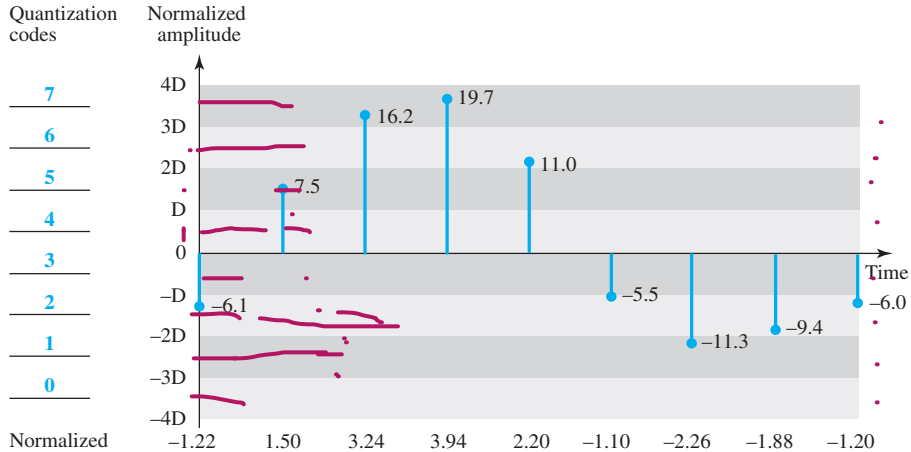

Normalized PAM values	–1.22	1.50	3.24	3.94	2.20	–1.10	–2.26	–1.88	–1.20
Normalized quantized values	–1.50	1.50	3.50	3.50	2.50	–1.50	–2.50	–1.50	–1.50
Normalized error	–0.38	0	+0.26	–0.44	+0.30	–0.40	–0.24	+0.38	–0.30
Quantization code	2	5	7	7	6	2	1	2	2
Encoded words	010	101	111	111	110	010	001	010	010

input values to the quantizer are the real values; the output values are the approximated values. The output values are chosen to be the middle value in the zone. If the input value is also at the middle of the zone, there is no quantization error; otherwise, there is an error. In the previous example, the normalized amplitude of the third sample is 3.24, but the normalized quantized value is 3.50. This means that there is an error of +0.26. The value of the error for any sample is less than $\Delta/2$. In other words, we have $-\Delta/2 \leq$ error $\leq \Delta/2$.

The quantization error changes the signal-to-noise ratio of the signal, which in turn reduces the upper limit capacity according to Shannon.

It can be proven that the contribution of the **quantization error** to the SNR_{dB} of the signal depends on the number of quantization levels L, or the bits per sample n_b, as shown in the following formula:

$$\mathbf{SNR_{dB} = 6.02n_b + 1.76 \quad dB}$$

Example 4.12

What is the SNR_{dB} in the example of Figure 4.26?

Solution

We can use the formula to find the quantization. We have eight levels and 3 bits per sample, so $SNR_{dB} = 6.02(3) + 1.76 = 19.82$ dB. Increasing the number of levels increases the SNR.

Example 4.13

A telephone subscriber line must have an SNR_{dB} above 40. What is the minimum number of bits per sample?

Solution

We can calculate the number of bits as

$$\mathbf{SNR_{dB} = 6.02n_b + 1.76 = 40 \quad \rightarrow \quad n = 6.35}$$

Telephone companies usually assign 7 or 8 bits per sample.

Uniform Versus Nonuniform Quantization

For many applications, the distribution of the instantaneous amplitudes in the analog signal is not uniform. Changes in amplitude often occur more frequently in the lower amplitudes than in the higher ones. For these types of applications it is better to use nonuniform zones. In other words, the height of Δ is not fixed; it is greater near the lower amplitudes and less near the higher amplitudes. Nonuniform quantization can also be achieved by using a process called **companding and expanding.** The signal is companded at the sender before conversion; it is expanded at the receiver after conversion. *Companding* means reducing the instantaneous voltage amplitude for large values; expanding is the opposite process. Companding gives greater weight to strong signals and less weight to weak ones. It has been proved that nonuniform quantization effectively reduces the SNR_{dB} of quantization.

Encoding

The last step in PCM is encoding. After each sample is quantized and the number of bits per sample is decided, each sample can be changed to an n_b-bit code word. In Figure 4.26 the encoded words are shown in the last row. A quantization code of 2 is encoded as 010; 5 is encoded as 101; and so on. Note that the number of bits for each sample is determined from the number of quantization levels. If the number of quantization levels is L, the number of bits is $n_b = \log_2 L$. In our example L is 8 and n_b is therefore 3. The bit rate can be found from the formula

$$\mathbf{Bit\ rate = sampling\ rate \times number\ of\ bits\ per\ sample = f_s \times n_b}$$

Example 4.14

We want to digitize the human voice. What is the bit rate, assuming 8 bits per sample?

Solution

The human voice normally contains frequencies from 0 to 4000 Hz. So the sampling rate and bit rate are calculated as follows:

$$\mathbf{Sampling\ rate = 4000 \times 2 = 8000\ samples/s}$$

$$\mathbf{Bit\ rate = 8000 \times 8 = 64{,}000\ bps = 64\ kbps}$$

Original Signal Recovery

The recovery of the original signal requires the PCM decoder. The decoder first uses circuitry to convert the code words into a pulse that holds the amplitude until the next

pulse. After the staircase signal is completed, it is passed through a low-pass filter to smooth the staircase signal into an analog signal. The filter has the same cutoff frequency as the original signal at the sender. If the signal has been sampled at (or greater than) the Nyquist sampling rate and if there are enough quantization levels, the original signal will be recreated. Note that the maximum and minimum values of the original signal can be achieved by using amplification. Figure 4.27 shows the simplified process.

Figure 4.27 *Components of a PCM decoder*

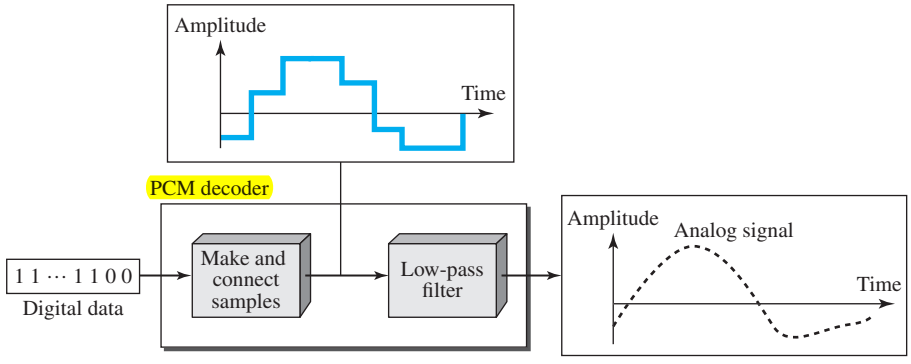

PCM Bandwidth

Suppose we are given the bandwidth of a low-pass analog signal. If we then digitize the signal, what is the new minimum bandwidth of the channel that can pass this digitized signal? We have said that the minimum bandwidth of a line-encoded signal is $B_{min} = c \times N \times (1/r)$. We substitute the value of N in this formula:

$$B_{min} = c \times N \times \frac{1}{r} = c \times n_b \times f_s \times \frac{1}{r} = c \times n_b \times 2 \times B_{analog} \times \frac{1}{r}$$

When $1/r = 1$ (for a NRZ or bipolar signal) and $c = (1/2)$ (the average situation), the minimum bandwidth is

$$B_{min} = n_b \times B_{analog}$$

This means the minimum bandwidth of the digital signal is n_b times greater than the bandwidth of the analog signal. This is the price we pay for digitization.

Example 4.15

We have a low-pass analog signal of 4 kHz. If we send the analog signal, we need a channel with a minimum bandwidth of 4 kHz. If we digitize the signal and send 8 bits per sample, we need a channel with a minimum bandwidth of 8 × 4 kHz = 32 kHz.

Maximum Data Rate of a Channel

In Chapter 3, we discussed the Nyquist theorem, which gives the data rate of a channel as $N_{max} = 2 \times B \times \log_2 L$. We can deduce this rate from the Nyquist sampling theorem by using the following arguments.

1. We assume that the available channel is low-pass with bandwidth B.
2. We assume that the digital signal we want to send has L levels, where each level is a signal element. This means $r = 1/\log_2 L$.
3. We first pass the digital signal through a low-pass filter to cut off the frequencies above B Hz.
4. We treat the resulting signal as an analog signal and sample it at $2 \times B$ samples per second and quantize it using L levels. Additional quantization levels are useless because the signal originally had L levels.
5. The resulting bit rate is $N = f_s \times n_b = 2 \times B \times \log_2 L$. This is the maximum bandwidth.

$$N_{max} = 2 \times B \times \log_2 L \quad \text{bps}$$

Minimum Required Bandwidth

The previous argument can give us the minimum bandwidth if the data rate and the number of signal levels are fixed. We can say

$$B_{min} = \frac{N}{(2 \times \log_2) L} \quad \text{Hz}$$

4.2.2 Delta Modulation (DM)

PCM is a very complex technique. Other techniques have been developed to reduce the complexity of PCM. The simplest is **delta modulation.** PCM finds the value of the signal amplitude for each sample; DM finds the change from the previous sample. Figure 4.28 shows the process. Note that there are no code words here; bits are sent one after another.

Figure 4.28 *The process of delta modulation*

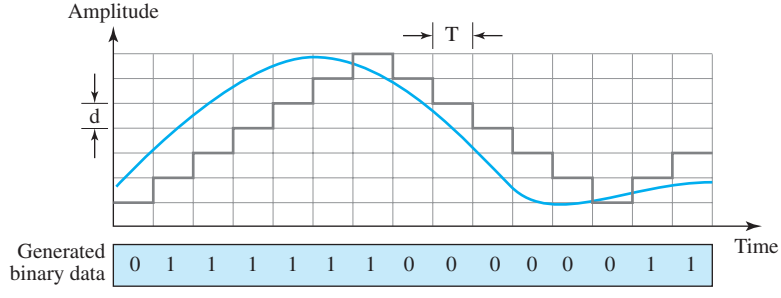

Modulator

The modulator is used at the sender site to create a stream of bits from an analog signal. The process records the small positive or negative changes, called delta δ. If the delta is positive, the process records a 1; if it is negative, the process records a 0. However, the process needs a base against which the analog signal is compared. The modulator builds a second signal that resembles a staircase. Finding the change is then reduced to comparing the input signal with the gradually made staircase signal. Figure 4.29 shows a diagram of the process.

Figure 4.29 *Delta modulation components*

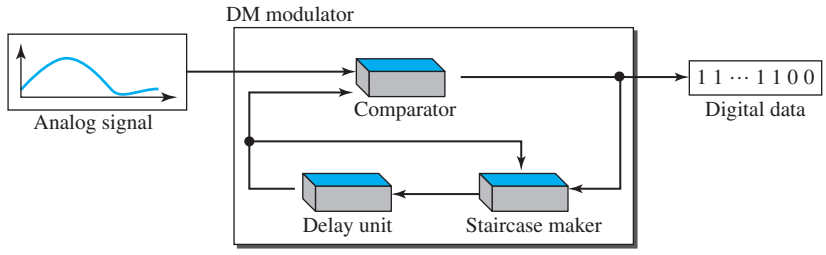

The modulator, at each sampling interval, compares the value of the analog signal with the last value of the staircase signal. If the amplitude of the analog signal is larger, the next bit in the digital data is 1; otherwise, it is 0. The output of the comparator, however, also makes the staircase itself. If the next bit is 1, the staircase maker moves the last point of the staircase signal δ up; if the next bit is 0, it moves it δ down. Note that we need a delay unit to hold the staircase function for a period between two comparisons.

Demodulator

The demodulator takes the digital data and, using the staircase maker and the delay unit, creates the analog signal. The created analog signal, however, needs to pass through a low-pass filter for smoothing. Figure 4.30 shows the schematic diagram.

Adaptive DM

A better performance can be achieved if the value of δ is not fixed. In **adaptive delta modulation,** the value of δ changes according to the amplitude of the analog signal.

Quantization Error

It is obvious that DM is not perfect. Quantization error is always introduced in the process. The quantization error of DM, however, is much less than that for PCM.

Figure 4.30 *Delta demodulation components*

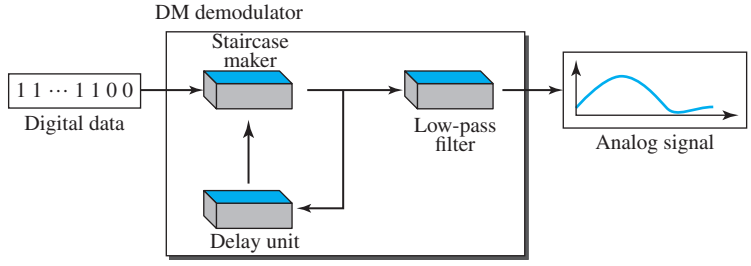

4.3 TRANSMISSION MODES

Of primary concern when we are considering the transmission of data from one device to another is the wiring, and of primary concern when we are considering the wiring is the data stream. Do we send 1 bit at a time; or do we group bits into larger groups and, if so, how? The transmission of binary data across a link can be accomplished in either parallel or serial mode. In parallel mode, multiple bits are sent with each clock tick. In serial mode, 1 bit is sent with each clock tick. While there is only one way to send parallel data, there are three subclasses of serial transmission: asynchronous, synchronous, and isochronous (see Figure 4.31).

Figure 4.31 *Data transmission and modes*

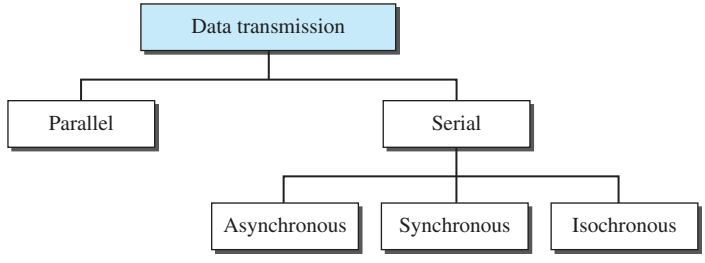

4.3.1 Parallel Transmission

Binary data, consisting of 1s and 0s, may be organized into groups of n bits each. Computers produce and consume data in groups of bits much as we conceive of and use spoken language in the form of words rather than letters. By grouping, we can send data n bits at a time instead of 1. This is called ***parallel transmission.***

The mechanism for parallel transmission is a conceptually simple one: Use n wires to send n bits at one time. That way each bit has its own wire, and all n bits of one

group can be transmitted with each clock tick from one device to another. Figure 4.32 shows how parallel transmission works for $n = 8$. Typically, the eight wires are bundled in a cable with a connector at each end.

Figure 4.32 *Parallel transmission*

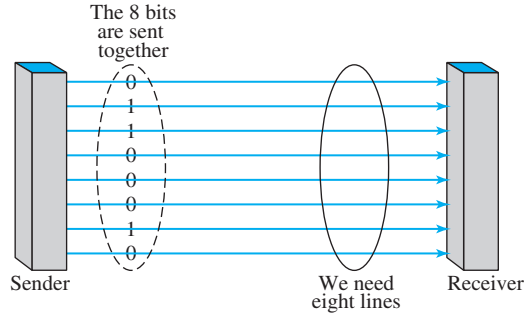

The advantage of parallel transmission is speed. All else being equal, parallel transmission can increase the transfer speed by a factor of n over serial transmission. But there is a significant disadvantage: cost. Parallel transmission requires n communication lines (wires in the example) just to transmit the data stream. Because this is expensive, parallel transmission is usually limited to short distances.

4.3.2 Serial Transmission

In **serial transmission** one bit follows another, so we need only one communication channel rather than n to transmit data between two communicating devices (see Figure 4.33).

Figure 4.33 *Serial transmission*

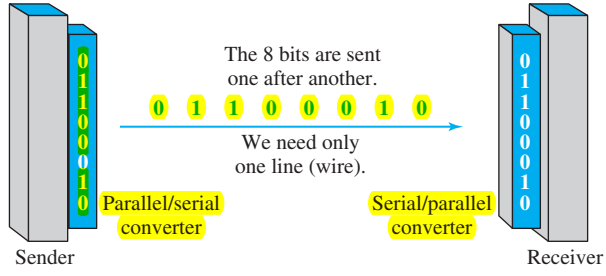

The advantage of serial over parallel transmission is that with only one communication channel, serial transmission reduces the cost of transmission over parallel by roughly a factor of n.

Since communication within devices is parallel, conversion devices are required at the interface between the sender and the line (parallel-to-serial) and between the line and the receiver (serial-to-parallel).

Serial transmission occurs in one of three ways: asynchronous, synchronous, and isochronous.

Asynchronous Transmission

Asynchronous transmission is so named because the timing of a signal is unimportant. Instead, information is received and translated by agreed upon patterns. As long as those patterns are followed, the receiving device can retrieve the information without regard to the rhythm in which it is sent. Patterns are based on grouping the bit stream into bytes. Each group, usually 8 bits, is sent along the link as a unit. The sending system handles each group independently, relaying it to the link whenever ready, without regard to a timer.

Without synchronization, the receiver cannot use timing to predict when the next group will arrive. To alert the receiver to the arrival of a new group, therefore, an extra bit is added to the beginning of each byte. This bit, usually a 0, is called the **start bit.** To let the receiver know that the byte is finished, 1 or more additional bits are appended to the end of the byte. These bits, usually 1s, are called **stop bits.** By this method, each byte is increased in size to at least 10 bits, of which 8 bits is information and 2 bits or more are signals to the receiver. In addition, the transmission of each byte may then be followed by a gap of varying duration. This gap can be represented either by an idle channel or by a stream of additional stop bits.

In asynchronous transmission, we send 1 start bit (0) at the beginning and 1 or more stop bits (1s) at the end of each byte. There may be a gap between bytes.

The start and stop bits and the gap alert the receiver to the beginning and end of each byte and allow it to synchronize with the data stream. This mechanism is called *asynchronous* because, at the byte level, the sender and receiver do not have to be synchronized. But within each byte, the receiver must still be synchronized with the incoming bit stream. That is, some synchronization is required, but only for the duration of a single byte. The receiving device resynchronizes at the onset of each new byte. When the receiver detects a start bit, it sets a timer and begins counting bits as they come in. After *n* bits, the receiver looks for a stop bit. As soon as it detects the stop bit, it waits until it detects the next start bit.

Asynchronous here means "asynchronous at the byte level," but the bits are still synchronized; their durations are the same.

Figure 4.34 is a schematic illustration of asynchronous transmission. In this example, the start bits are 0s, the stop bits are 1s, and the gap is represented by an idle line rather than by additional stop bits.

The addition of stop and start bits and the insertion of gaps into the bit stream make asynchronous transmission slower than forms of transmission that can operate

Figure 4.34 *Asynchronous transmission*

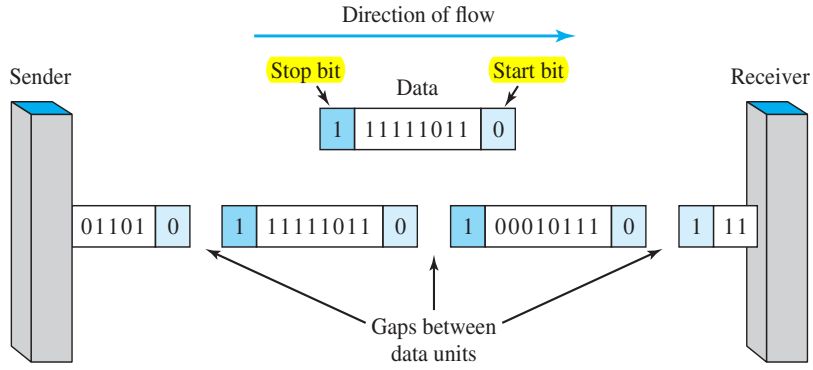

without the addition of control information. But it is cheap and effective, two advantages that make it an attractive choice for situations such as low-speed communication. For example, the connection of a keyboard to a computer is a natural application for asynchronous transmission. A user types only one character at a time, types extremely slowly in data processing terms, and leaves unpredictable gaps of time between characters.

Synchronous Transmission

In **synchronous transmission,** the bit stream is combined into longer "frames," which may contain multiple bytes. Each byte, however, is introduced onto the transmission link without a gap between it and the next one. It is left to the receiver to separate the bit stream into bytes for decoding purposes. In other words, data are transmitted as an unbroken string of 1s and 0s, and the receiver separates that string into the bytes, or characters, it needs to reconstruct the information.

In synchronous transmission, we send bits one after another without start or stop bits or gaps. It is the responsibility of the receiver to group the bits.

Figure 4.35 gives a schematic illustration of synchronous transmission. We have drawn in the divisions between bytes. In reality, those divisions do not exist; the sender puts its data onto the line as one long string. If the sender wishes to send data in separate bursts, the gaps between bursts must be filled with a special sequence of 0s and 1s that means *idle*. The receiver counts the bits as they arrive and groups them in 8-bit units.

Without gaps and start and stop bits, there is no built-in mechanism to help the receiving device adjust its bit synchronization midstream. Timing becomes very important, therefore, because the accuracy of the received information is completely dependent on the ability of the receiving device to keep an accurate count of the bits as they come in.

Figure 4.35 *Synchronous transmission*

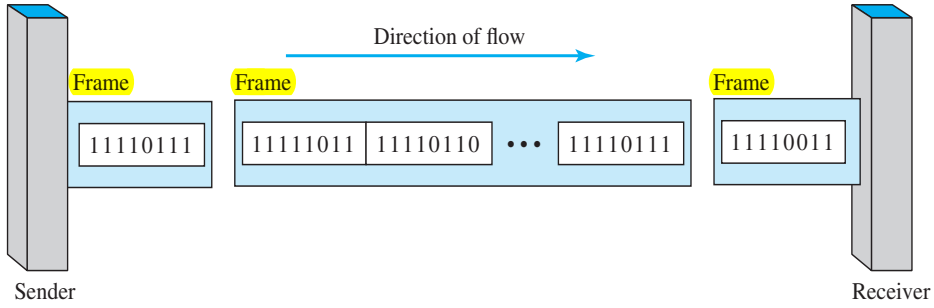

The advantage of synchronous transmission is speed. With no extra bits or gaps to introduce at the sending end and remove at the receiving end, and, by extension, with fewer bits to move across the link, synchronous transmission is faster than asynchronous transmission. For this reason, it is more useful for high-speed applications such as the transmission of data from one computer to another. Byte synchronization is accomplished in the data-link layer.

We need to emphasize one point here. Although there is no gap between characters in synchronous serial transmission, there may be uneven gaps between frames.

Isochronous

In real-time audio and video, in which uneven delays between frames are not acceptable, synchronous transmission fails. For example, TV images are broadcast at the rate of 30 images per second; they must be viewed at the same rate. If each image is sent by using one or more frames, there should be no delays between frames. For this type of application, synchronization between characters is not enough; the entire stream of bits must be synchronized. The **isochronous transmission** guarantees that the data arrive at a fixed rate.

4.4 END-CHAPTER MATERIALS

4.4.1 Recommended Reading

For more details about subjects discussed in this chapter, we recommend the following books. The items in brackets [...] refer to the reference list at the end of the text.

Books

Digital to digital conversion is discussed in [Pea92], [Cou01], and [Sta04]. Sampling is discussed in [Pea92], [Cou01], and [Sta04]. [Hsu03] gives a good mathematical approach to modulation and sampling. More advanced materials can be found in [Ber96].

4.4.2 Key Terms

adaptive delta modulation
alternate mark inversion (AMI)
analog-to-digital conversion
asynchronous transmission
baseline
baseline wandering
baud rate
biphase
bipolar
bipolar with 8-zero substitution (B8ZS)
bit rate
block coding
companding and expanding
data element
data rate
DC component
delta modulation (DM)
differential Manchester
digital-to-digital conversion
digitization
eight binary/ten binary (8B/10B)
eight-binary, six-ternary (8B6T)
four binary/five binary (4B/5B)
four dimensional, five-level pulse amplitude modulation (4D-PAM5)
high-density bipolar 3-zero (HDB3)
isochronous transmission
line coding
Manchester
modulation rate
multilevel binary
multiline transmission, three-level (MLT-3)
non-return-to-zero (NRZ)
non-return-to-zero, invert (NRZ-I)
non-return-to-zero, level (NRZ-L)
Nyquist theorem
parallel transmission
polar
pseudoternary
pulse amplitude modulation (PAM)
pulse code modulation (PCM)
pulse rate
quantization
quantization error
return-to-zero (RZ)
sample and hold
sampling
sampling rate
scrambling
self-synchronizing
serial transmission
signal element
signal rate
start bit
stop bit
synchronous transmission
transmission mode
two-binary, one quaternary (2B1Q)
unipolar

4.4.3 Summary

Digital-to-digital conversion involves three techniques: line coding, block coding, and scrambling. Line coding is the process of converting digital data to a digital signal. We can roughly divide line coding schemes into five broad categories: unipolar, polar, bipolar, multilevel, and multitransition. Block coding provides redundancy to ensure synchronization and inherent error detection. Block coding is normally referred to as mB/nB coding; it replaces each m-bit group with an n-bit group. Scrambling provides synchronization without increasing the number of bits. Two common scrambling techniques are B8ZS and HDB3.

The most common technique to change an analog signal to digital data (digitization) is called pulse code modulation (PCM). The first step in PCM is sampling. The analog signal is sampled every T_s second, where T_s is the sample interval or period. The inverse of the sampling interval is called the *sampling rate* or *sampling frequency* and denoted by f_s, where $f_s = 1/T_s$. There are three sampling methods—ideal, natural, and flat-top. According to the *Nyquist theorem,* to reproduce the original analog signal, one necessary condition is that the *sampling rate* be at least twice the highest frequency in

the original signal. Other sampling techniques have been developed to reduce the complexity of PCM. The simplest is delta modulation. PCM finds the value of the signal amplitude for each sample; DM finds the change from the previous sample.

While there is only one way to send parallel data, there are three subclasses of serial transmission: asynchronous, synchronous, and isochronous. In asynchronous transmission, we send 1 start bit (0) at the beginning and 1 or more stop bits (1s) at the end of each byte. In synchronous transmission, we send bits one after another without start or stop bits or gaps. It is the responsibility of the receiver to group the bits. The isochronous mode provides synchronization for the entire stream of bits. In other words, it guarantees that the data arrive at a fixed rate.

4.5 PRACTICE SET

4.5.1 Quizzes

A set of interactive quizzes for this chapter can be found on the book website. It is strongly recommended that the student take the quizzes to check his/her understanding of the materials before continuing with the practice set.

4.5.2 Questions

Q4-1. List three techniques of digital-to-digital conversion.

Q4-2. Distinguish between a signal element and a data element.

Q4-3. Distinguish between data rate and signal rate.

Q4-4. Define baseline wandering and its effect on digital transmission.

Q4-5. Define a DC component and its effect on digital transmission.

Q4-6. Define the characteristics of a self-synchronizing signal.

Q4-7. List five line coding schemes discussed in this book.

Q4-8. Define block coding and give its purpose.

Q4-9. Define scrambling and give its purpose.

Q4-10. Compare and contrast PCM and DM.

Q4-11. What are the differences between parallel and serial transmission?

Q4-12. List three different techniques in serial transmission and explain the differences.

4.5.3 Problems

P4-1. Calculate the value of the signal rate for each case in Figure 4.2 if the data rate is 1 Mbps and c = 1/2.

P4-2. In a digital transmission, the sender clock is 0.2 percent faster than the receiver clock. How many extra bits per second does the sender send if the data rate is 1 Mbps?

P4-3. Draw the graph of the NRZ-L scheme using each of the following data streams, assuming that the last signal level has been positive. From the graphs, guess the bandwidth for this scheme using the average number of changes

in the signal level. Compare your guess with the corresponding entry in Table 4.1.

a. 00000000 **b.** 11111111 **c.** 01010101 **d.** 00110011

P4-4. Repeat Problem P4-3 for the NRZ-I scheme.

P4-5. Repeat Problem P4-3 for the Manchester scheme.

P4-6. Repeat Problem P4-3 for the differential Manchester scheme.

P4-7. Repeat Problem P4-3 for the 2B1Q scheme, but use the following data streams.

a. 0000000000000000

b. 1111111111111111

c. 0101010101010101

d. 0011001100110011

P4-8. Repeat Problem P4-3 for the MLT-3 scheme, but use the following data streams.

a. 00000000 **b.** 11111111 **c.** 01010101 **d.** 00011000

P4-9. Find the 8-bit data stream for each case depicted in Figure 4.36.

Figure 4.36 *Problem P4-9*

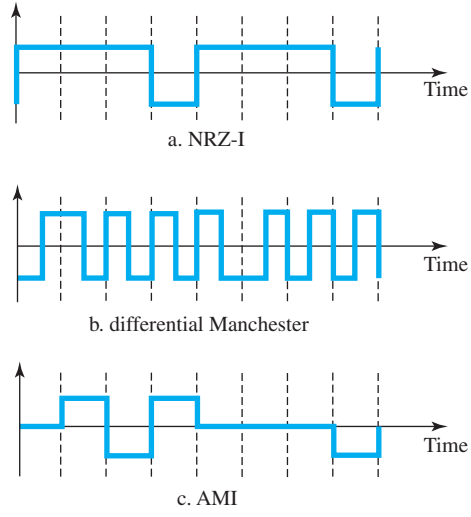

P4-10. An NRZ-I signal has a data rate of 100 Kbps. Using Figure 4.6, calculate the value of the normalized energy (P) for frequencies at 0 Hz, 50 KHz, and 100 KHz.

P4-11. A Manchester signal has a data rate of 100 Kbps. Using Figure 4.8, calculate the value of the normalized energy (P) for frequencies at 0 Hz, 50 KHz, 100 KHz.

P4-12. The input stream to a 4B/5B block encoder is

0100 0000 0000 0000 0000 0001

Answer the following questions:

a. What is the output stream?

b. What is the length of the longest consecutive sequence of 0s in the input?

c. What is the length of the longest consecutive sequence of 0s in the output?

P4-13. How many invalid (unused) code sequences can we have in 5B/6B encoding? How many in 3B/4B encoding?

P4-14. What is the result of scrambling the sequence 11100000000000 using each of the following scrambling techniques? Assume that the last non-zero signal level has been positive.

a. B8ZS

b. HDB3 (The number of nonzero pulses is odd after the last substitution.)

P4-15. What is the Nyquist sampling rate for each of the following signals?

a. A low-pass signal with bandwidth of 200 KHz?

b. A band-pass signal with bandwidth of 200 KHz if the lowest frequency is 100 KHz?

P4-16. We have sampled a low-pass signal with a bandwidth of 200 KHz using 1024 levels of quantization.

a. Calculate the bit rate of the digitized signal.

b. Calculate the SNR_{dB} for this signal.

c. Calculate the PCM bandwidth of this signal.

P4-17. What is the maximum data rate of a channel with a bandwidth of 200 KHz if we use four levels of digital signaling.

P4-18. An analog signal has a bandwidth of 20 KHz. If we sample this signal and send it through a 30 Kbps channel, what is the SNR_{dB}?

P4-19. We have a baseband channel with a 1-MHz bandwidth. What is the data rate for this channel if we use each of the following line coding schemes?

a. NRZ-L **b.** Manchester **c.** MLT-3 **d.** 2B1Q

P4-20. We want to transmit 1000 characters with each character encoded as 8 bits.

a. Find the number of transmitted bits for synchronous transmission.

b. Find the number of transmitted bits for asynchronous transmission.

c. Find the redundancy percent in each case.

4.6 SIMULATION EXPERIMENTS

4.6.1 Applets

We have created some Java applets to show some of the main concepts discussed in this chapter. It is strongly recommended that the students activate these applets on the book website and carefully examine the protocols in action.